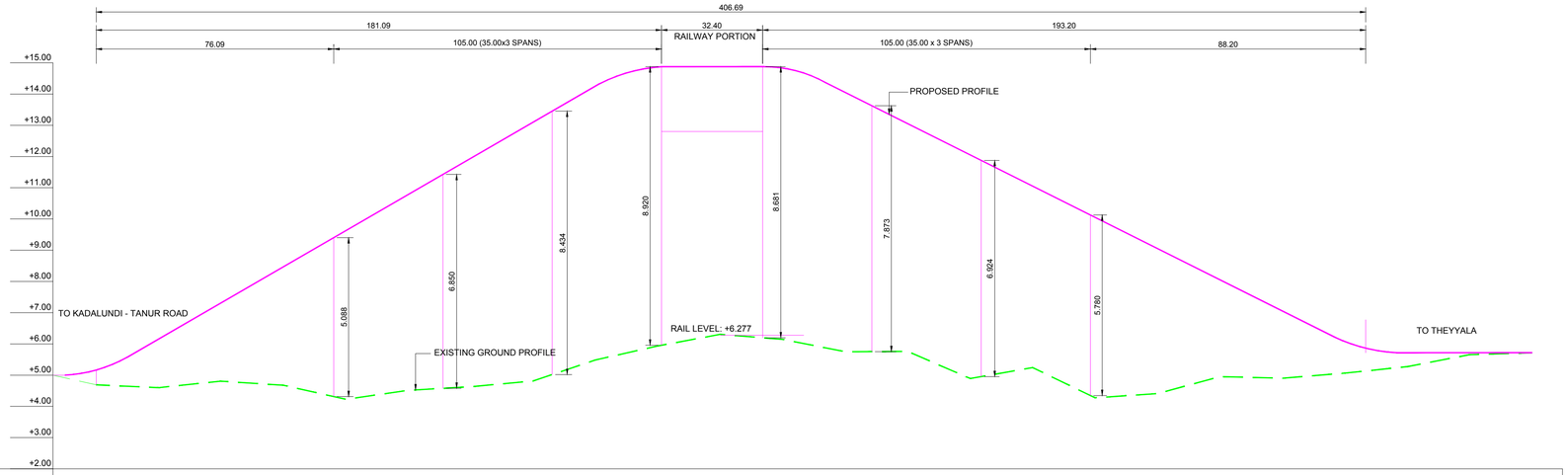

FINISHED ROAD LEVEL	5.163	6.157	7.315	8.472	9.629	10.786	11.944	13.101	14.258	14.869	14.877	14.833	14.051	13.051	12.051	11.051	10.051	9.051	8.051	7.051	6.075	5.717	5.717	5.717
VERTICAL ALIGNMENT	VALLEY CURVE		G=+5.78%						SUMMIT CURVE		G=±0.00%	SUMMIT CURVE		G=+5.00%							VALLEY CURVE			
HORIZONTAL ALIGNMENT		ST. LENGTH= 90.63				R= 150 C. LENGTH= 76.82				ST. LENGTH= 85.16				R= 150 C. LENGTH= 39.19		ST. LENGTH= 112.28							
EXISTING LEVEL	4.69	4.60	4.81	4.68	4.23	4.52	4.63	4.82	5.49	5.94	6.31	6.15	5.75	5.76	4.90	5.25	4.28	4.41	4.96	4.90	5.07	5.28	5.66	5.72
CHAINAGE	0.00	20.00	40.00	60.00	80.00	100.00	120.00	140.00	160.00	180.00	200.00	220.00	240.00	260.00	280.00	300.00	320.00	340.00	360.00	380.00	400.00	420.00	440.00	460.00

LONGITUDINAL PROFILE

SCALE: HOR. 1:1000
VER. 1:100

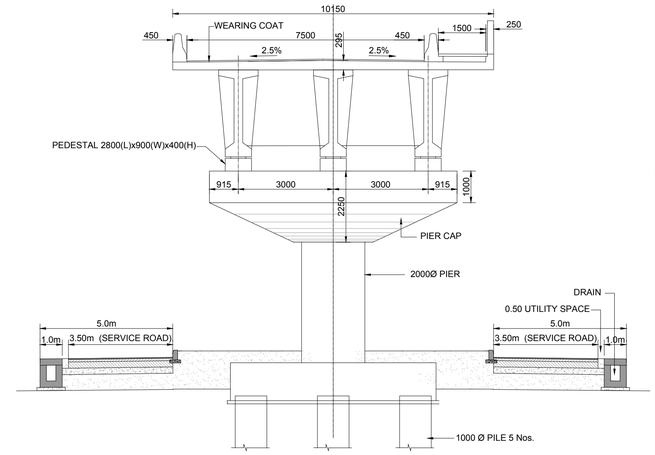

TYPICAL CROSS SECTION AT APPROACH (TRESTLE) PORTION

(ALL DIMENSIONS ARE IN mm)

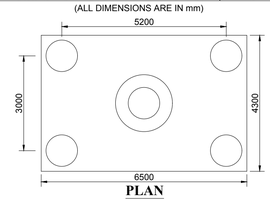

PLAN
PILE CAP

CENTER LINE CO ORDINATES
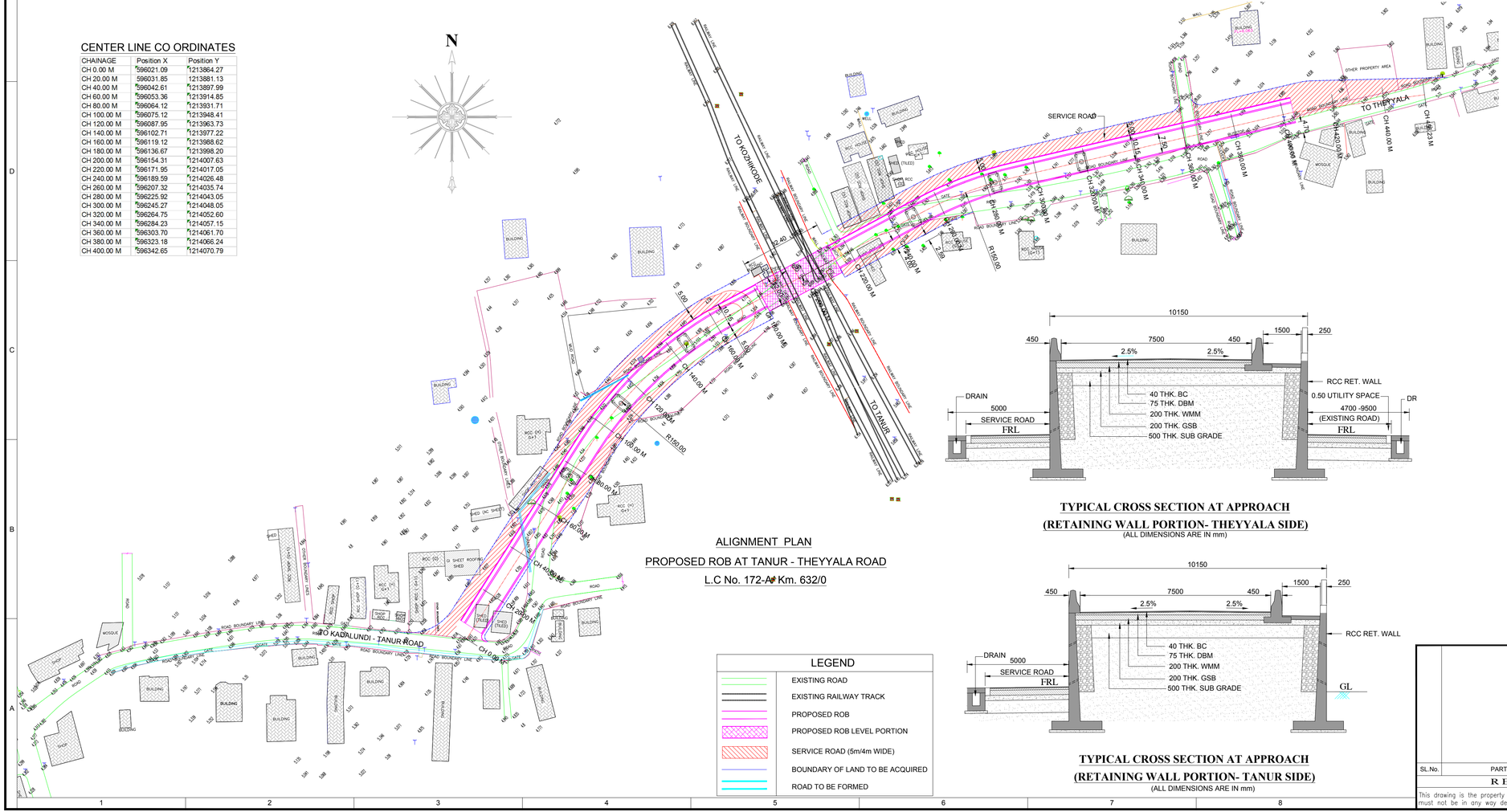
CHAINAGE	Position X	Position Y
CH 0.00 M	596021.09	1213864.27
CH 20.00 M	596031.85	1213881.13
CH 40.00 M	596042.61	1213897.99
CH 60.00 M	596053.36	1213914.85
CH 80.00 M	596064.12	1213931.71
CH 100.00 M	596075.12	1213948.41
CH 120.00 M	596087.95	1213963.73
CH 140.00 M	596102.71	1213977.22
CH 160.00 M	596119.12	1213988.62
CH 180.00 M	596136.67	1213998.20
CH 200.00 M	596154.31	1214007.63
CH 220.00 M	596171.95	1214017.05
CH 240.00 M	596189.59	1214026.48
CH 260.00 M	596207.32	1214035.74
CH 280.00 M	596225.92	1214043.05
CH 300.00 M	596245.27	1214048.05
CH 320.00 M	596264.75	1214052.60
CH 340.00 M	596284.23	1214057.15
CH 360.00 M	596303.70	1214061.70
CH 380.00 M	596323.18	1214066.24
CH 400.00 M	596342.65	1214070.79